Renewable and Sustainable Energy Reviews 81 (2018) 149–160

Contents lists available at ScienceDirect

Renewable and Sustainable Energy Reviews

journal homepage: www.elsevier.com/locate/rser

Analysis on solar PV emulators: A review

J. Prasanth Ram[a], Himanshu Manghani[a], Dhanup S. Pillai[a], T. Sudhakar Babu[a], Masafumi Miyatake[b], N. Rajasekar[a,*]

[a] Solar Energy Research Cell (SERC), School of Electrical Engineering, VIT University, Vellore, India
[b] Department of Engineering and Applied Sciences, Sophia University, Japan

ARTICLE INFO

Keywords:
Partial shading conditions
Photovoltaic's
Emulator
Real time controller

ABSTRACT

In recent years, continuous depletion of conventional energy resources and the fluctuating fuel cost have motivated research on alternative source for power generation. To effectively harvest power from the green energy resources, extensive research have been carried out in literature. Solar energy being the foremost among all other renewable energy resources has evolved as a reliable substitute for the conventional power generation. Unlike other sources, real time research on Photovoltaic (PV) Systems is a difficult assignment as it necessitates an accurate PV emulator that can precisely replicate the nonlinear characteristics of a PV cell. PV Researchers have developed emulators of different type utilizing various configurations. This paper attempts to present a comprehensive review on different PV emulator topologies so as to gather all the research activities that are scattered in this arena under a common umbrella. Further this paper provides a detailed analysis of each technique emphasizing on its (i) Realization cost (ii) Accuracy (iii) Level of complexity (iv) Sensitiveness to varying environmental conditions (v) Hardware implementation and (vi) Efficiency.

1. Introduction

Exhaustion of conventional energy reserve and alarming environmental concerns (e.g. pollution) has instigated the necessity to find a substitute for traditional power generation [1,2]. With zero environmental threat, solar energy has gained universal attention for its huge potential and inexhaustible nature [3,4]. Moreover, eco friendly renewable power generation is considered to be an important asset for the mankind.

Since, the solar energy has proven to be a competent energy resource; the requirement of innovative research is very high and becomes a crucial factor in achieving sustainable solar power generation [5–7]. However, in real time, experimentation with solar PV system is heavily pounded by factors such as: (i) manufacturing cost, (ii) large area requirement and (iii) discontinuous solar irradiation. Further, conditioned harmonic free output and maximum power extraction provoked the necessity for rigorous testing of different power electronic configurations [1,2]. Overall, the above factors affect the spontaneity of real time solar PV research [8,9]. Therefore to envisage research in solar PV systems, an equivalent to real PV panel with light insolated environment is mandatory. Hence as an alternative, PV emulator that is consistent, time independent and free from space constraints is a duly requirement to perform precise simulation analysis and experimental validations. Moreover, a PV emulator can be a useful tool for testing the performance of power converters during the design and developmental phase.

In literature, various scholarly research employing assorted methodologies are available for design of PV emulator. However there is no published work up to date in consolidating the efforts. Moreover no attempts were made to even categorize the works and summarize the contributions. Hence in this paper, the authors carried out a profound effort to classify the articles that are scattered in PV emulator design arena and try to recapitulate the articles in the form of a review.

The coherent idea behind emulating PV characteristics was first nurtured with the diode based approximation techniques [9–17]. The conventional modeling methods followed single diode based approximation to realize a PV emulator [10–13]. However, the single diode method lacks accuracy on varying irradiation conditions. Hence, the same method with few modifications reemerged in the form double diode model [14,17]. Irrespective of change in irradiation and temperature conditions, this method successfully reproduces exact I-V and P-V curves. The accurate predictions under varying environmental conditions, in fact made the method to be efficient and reliable one for PV emulator. In recent times, converter based emulator design is also proved to be robust, reliable and efficient method. Further they have provisions for MPPT testing as well [18–23]. Converters like buck,

* Correspondence to: School of Electrical Engineering, VIT University, Vellore 632014, Tamil Nadu, India.
E-mail addresses: jkprasanthram@gmail.com (J.P. Ram), h.manghani2014@vit.ac.in (H. Manghani), dhanup.research@gmail.com (D.S. Pillai), sudhakarbabu66@gmail.com (T.S. Babu), miyatake@sophia.ac.jp (M. Miyatake), natarajanrajasekar@gmail.com (N. Rajasekar).

http://dx.doi.org/10.1016/j.rser.2017.07.039
Received 13 May 2016; Received in revised form 5 July 2017; Accepted 10 July 2017
Available online 20 July 2017
1364-0321/ © 2017 Elsevier Ltd. All rights reserved.

Nomenclature

G	Irradiance (W/m^2)
I_{mp}	Maximum current at maximum power point (A)
I_o	Saturation current of the diode (A)
I_{pv}	Solar PV current (A)
I_{sc}	Short-circuit current (A)
K_i	Short-circuit current coefficient
K_v	Short-circuit voltage coefficient
N_{ss}	Number of cells connected in series
N_{pp}	Number of cells connected in parallel
P	Total power
P_{mp}	Power at maximum power point
R_s	Series resistance
R_p	Parallel resistance
V_{oc}	Open circuit voltage (v)
V_T	Thermal voltage (v)
α	Diode ideality factor
ΔT	Change in temperature(k)
ANN	Artificial Neural Networks
FPAA	Field Programmable Analog Array
FPGA	Field Programmable Gate Array
GNG	Growing Natural Gas
GUI	Graphical User Interface
LABVIEW	Laboratory Virtual Instrument Engineering Workbench
LLC	Inductor-Inductor Capacitor
MSE	Mean Square Error
PEMFC	Proton Exchange Membrane Fuel Cell
PHILS	Power Hardware-in-the-Loop Simulation
PSC	Partial Shaded Condition
SEPIC	Single-Ended Primary-Inductor Converter
ZVZCS	Zero Voltage Zero Current Switching

boost, SEPIC and LLC type have been mostly investigated for its suitability [24–39]. As a value-added feature, controllers like µcontroller and PIC controller have been utilized and made the design specific and consistent [40–55]. Once the real-time controller platform was introduced and applied for emulator design; the accuracy levels were significantly enhanced. Moreover, use of the real-time controllers such as dspace, new Sitara Cortex 9, ARM and FPGA controllers have added flavor to the hopes of emulating PV characteristics under partial shaded conditions too [42,44,46,48]. But PV emulators based on real time controller require a high cost controller that increases the cost of implementation.

Considering the promise shown by Evolutionary Algorithm (EA) methods in solving stochastic optimization problems, PV emulator design has seen a considerable uplift [25,66]. These methods added values and have shown gateway to produce near accurate curve fit with less errors. However the memory requirement and the number of iterations taken to reach precision were very high. Alternatively, these methods on combination with FPGA controller have shown good results to comprehend. But the cost of realization and the level of complexity incurred were quite high [76]. Acknowledging the increased renewable power generation along with PV, research related to the design and testing of wind and fuel cell emulators in a hybrid scenario are also advancing in the miscellaneous category [56–68]. These emulators are highly flexible and can be used in the testing of Nano and Micro grid applications.

Other than the methods mentioned, several techniques like Lambert ω based method [79,80], Zero Voltage and Zero Current Switching (ZVZCS) method [69], battery based emulator method [70,71], solar thermal emulators [74], IOT emulators [75] and LabVIEW based emulator [78] are also available. However, these methods possess significant error values [72,73,77] and hence rarely used. In particular, large errors near V_{oc} and I_{sc} are found in ZVZCS method and is also characterized by poor dynamic response [69].

Thus, the research on PV emulators has traversed a great extent and needs a review article that explains the various design aspects and its applications. Further various approaches in simulator design need to be recapitulated and presented. Thus, a comprehensive evaluation of all available methods is summarized based on: (i) Realization cost, (ii) Accuracy, (iii) Level of complexity, (iv) Sensitiveness to varying environmental conditions, (v) Hardware Implementation, and (vi) Efficiency. The remaining part of the paper is organized as follows.

Section 2 gives an overview of PV emulators and the significance of partial shading conditions. Section 3 deals with different classifications of PV emulators, Section 4 gives a comparative study on different PV emulators realized so far in the literature.

2. Overview of PV emulators

With increased penetration of PV system in the power generation sector, the need for PV emulator stems primarily from testing of PE interface present in the system. Since the real PV systems face issues such as (i) Lack of coordination (ii) Poor system voltage regulation and (iii) Less transient stability under fault ride through conditions. Therefore, the above factors necessitated the need for congruent testing of converters before exposing it to the environment and hence unveiled the at most requirement of PV emulators.

The basic function of a PV emulator is to replicate a real PV panel by accurately emulating its I-V and P-V characteristics. The real challenge behind emulator design is exact reproduction of the actual PV curves at all environmental conditions including partial shading. At the same time the designed PV emulator must be compatible for PE interface testing having different ratings. Therefore, the requisites of a reliable PV emulator can be summarized as:

- Ability to interface with PE converters.
- Reproduction of accurate I-V and P-V curve under partial shading conditions.
- Ability to shift the operating point corresponding to frequent load changes.

2.1. Testing

A PV system may exhibit certain non linearity's such as 1) Overvoltage, 2) Sags, 3) Swells, and 4) line faults when connected to the grid. This causes operating voltage and current of PV to change continuously. Further any grid connected inverter must be tested for conditions like islanding and grid synchronization. Hence before real time implementation, the grid connected system must be tested with different atmospheric and abnormal conditions. Under such circumstances, inverter testing in a controlled environment via emulator is a wise choice. Further this setup assists in performance evaluation of the system.

2.2. Partial shading conditions (PSC)

Solar PV panels are connected in series and parallel fashion to form a PV array, in order to feed high power loads. These panels on cloudy days might experience fast, dynamic insolation changes that result in non-uniform irradiation across the panels. Moreover the same phenomenon occurs due to bird droppings, pole and tree shadows [19,23]. Under such circumstances, the panel receiving lower irradiation act as a load and hotspots are created. This condition further deteriorates the power delivered by the panel and hence the efficiency. To avoid hotspot

problem, bypass diodes are connected across each panel; however addition of these diodes leads to the formation of multiple peaks in P-V curve as shown in Fig. 1(a) & (b). The replication of I-V and P-V curves under above partial shading conditions is a massive task and highly demanding for an emulator.

3. Classification of PV emulators

Over the decades, the introduction of emulators has remarkably contributed to increased utilization of solar energy. Further, the emulator design arena has witnessed a phenomenal uplift starting from basic mathematical model approximation to real time controller implementations in recent times. In addition, many solar PV emulators have also been launched in the market to realize accurate PV characteristics. This section classifies the various PV emulators available in literature into four categories and provides a detailed discussion on each category in the following subsections.

3.1. Diode model approximation based PV emulator

The diode model approximation is one of the oldest methods used for the design of emulators. Since PV panel exhibit non-linear behavior, researchers have used the diode based approximation method to emulate solar PV characteristics. The most commonly used single diode and double diode model based approximation techniques have accurately replicated the I-V and P-V characteristics of PV panel. Hence, panels used for the design of efficient emulator in literature [3,4]. The schematic representations of single and double diode models are shown in Fig. 2(a) and (b).

Applying Kirchhoff's current law at node 'a' and node 'b', the output equation of single diode and double diode models are given as

$$I = N_{pp}\left\{I_{PV} - I_O\left[\exp\left(\frac{V + IR_S}{aV_tN_{ss}}\right) - 1\right]\right\} - \left(\frac{V + IR_S}{R_P}\right) \tag{1}$$

$$I = N_{pp}\left\{I_{PV} - I_{O1}\left[\exp\left(\frac{V + IR_S}{a_1V_tN_{ss}}\right) - 1\right] - I_{O2}\left[\exp\left(\frac{V + IR_S}{a_2V_tN_{ss}}\right) - 1\right]\right\} - \left(\frac{V + IR_S}{R_P}\right) \tag{2}$$

Where $'R_s'$, $'R_P'$ the series and parallel resistance, $'I_{PV}'$ is the PV voltage, $'a_1'$, $'a_2'$ are diode ideality factors and $'N_{ss}'$, $'N_{PP}'$ are the number of cells connected in series and parallel

From (1) and (2) it can be observed that five parameters (I_o, I_{pv}, R_s, R_p and a) are required to consummate the single diode model whereas seven parameters (I_{o1}, I_{02}, I_{pv}, R_s, R_p, a_1 and a_2) are required for the double diode model [2–8]. However, both models have certain elements in common and incorporate the practical losses and recombination effects that incur in real PV panels. The significance of each component in diode modeling is presented in Table 1. Further, it is noteworthy to mention that the accuracy of these parameters directly affect the predicted PV characteristics accuracy.

3.1.1. Analog PV emulator

As discussed earlier, emulators are generally realized by accurate modeling of solar PVs and especially through the well known single diode and double diode model based approximation methods. To accurately replicate the change in irradiation levels, the design of the solar PV emulator based on single diode approximation model is practically realized using an operational amplifier based analog circuit shown in Fig. 3. The method uses varying resistances to sense the open circuit voltage and short circuit current and fed as input to the Operational Amplifier (Op-Amp). Based on the input data, maximum power is extracted and the I-V curve is simulated [9]. Since Op-Amp based emulator finds application in space research; a laboratory prototype of 300 W capacity was built for NASA Goddard space flight center [9]. Similar works on using Operational Amplifiers can be seen in [13], where the author improved the modeling performance by making use of a differential amplifier. However, the sampling time constraints in microprocessor impose limitations for switching frequencies beyond 20 kHz. Furthermore, the generated I-V curves show 5% error with respect to the experimental I-V and P-V curves.

The authors in [10] simulated the essential characteristics of solar PV array emulator circuit using a system comprising of DC amplifier, DC power source and a photo sensor. The photo sensor arrangement is segmented into two sections where the only difference between them is results in the generation of PV current. This current indicates the operating point of PV and it can be varied by using a DC bias circuit where it also has a provision for voltage regulation as well. This emulator has been specifically designed for those systems equipped with multi-level inverters.

A highly sensitive emulator incorporated with a photo-sensor capable to deliver 30 W PV power output was designed with the help of an I-V magnifier circuit in [11]. The developed system helps to improve the dynamic response of the PV emulator. Further, the current and voltage gains are adjusted individually using a feedback control system. The proposed technique possesses simple control system with remote control capability.

A PV emulator via curve fitting employing current regulator was presented in [15]. The methodology adopted is depicted in Fig. 4. Although the system was designed with low cost components, it lacks accuracy in prediction of I-V curves under varying operating conditions. Further, the emulator performance under partially shaded conditions was not investigated. In [16], the author has proposed

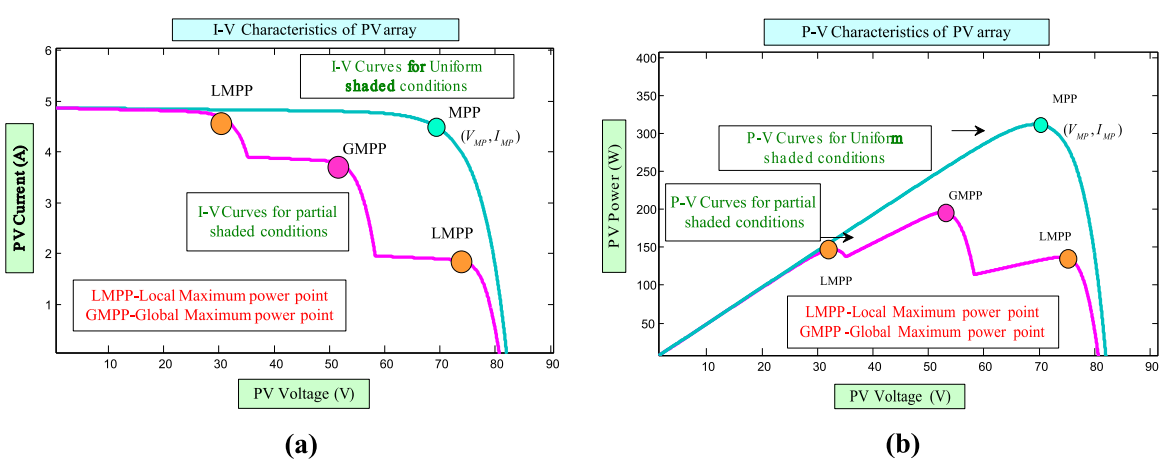

Fig. 1. (a). I-V Curve under partial shaded condition. **(b).** P-V Curve under partial shaded condition.

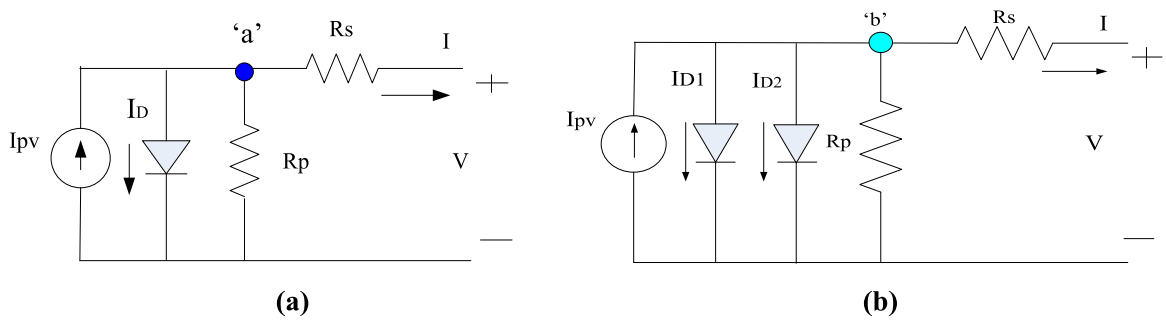

Fig. 2 (a). Single diode model [2,5]. **(b).** Double diode model [2,5].

Table 1.
Losses in diode modeling.

Sl. No	Component	Representation	Replicated PV characteristics
1	Current source	Optical losses	Current regulation
2	Diode	Recombination losses	Temperature effects
3	Resistance	Ohmic losses	Loading effects

and tested a new emulator integrated with ARM controller. But the same drawbacks discussed for [15] stands here as well.

The kind of promise that several optimization techniques have shown in treating the nonlinear engineering problems motivated the author in [17] to apply Newton – Raphson based optimization method to extract the PV model parameters like R_S, R_P&a, as an alternative to the Op-Amp based approach discussed so far. As expected, the method outperformed other techniques with a good curve fit along with an improved convergence.

In [14], a novel two diode approximation model was proposed and tested in the MATLAB platform. Comparing to the sluggish response and delayed extraction of PV parameters in analog circuit based approach; this method yields a fast and dynamic response to emulate exact P-V and I-V characteristics. Further, simulation analysis for several partial shading conditions was done for a large PV array. The authors of [14] claimed that double diode approximation has higher accuracy when compared to single diode approximation techniques. The iterative approach yielded some good results in agreement with the experimental values. Simulation analysis was carried out for three different types of PV panels: (i) Mono crystalline (ii) Multi crystalline

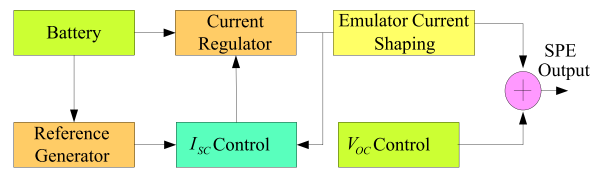

Fig. 4. Solar PV emulator design [15].

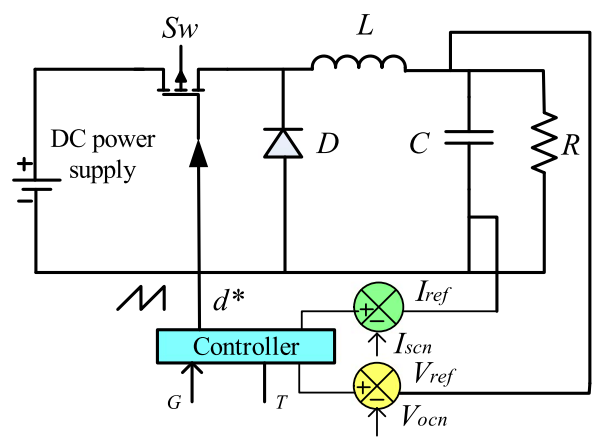

Fig. 5. Buck converter implemented for PV simulator.

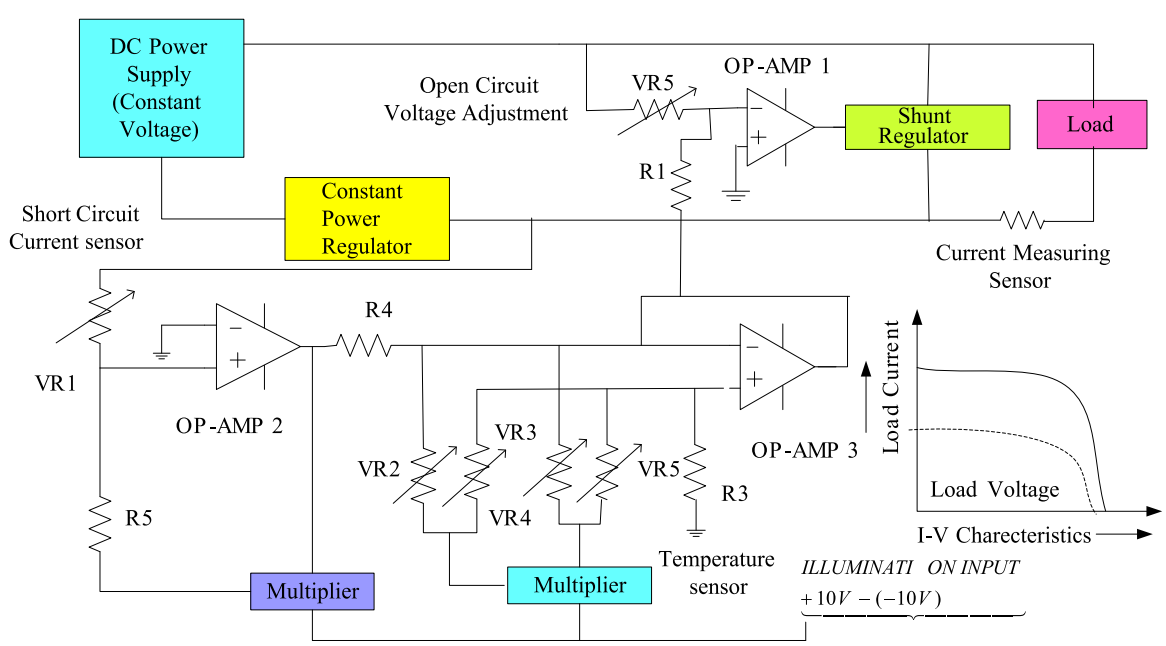

Fig. 3. Emulator Design based on op-Amp [9].

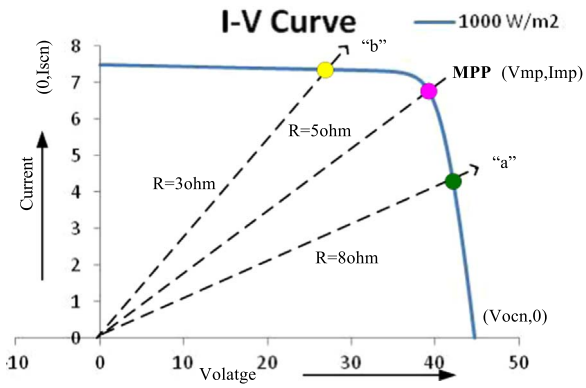

Fig. 6. Load line characteristics.

and (iii) Thin film. The paper has further extended its application towards MPPT based PV systems and the designed emulator has ensured its maximum power tracking capability. Following new formulas i.e., Eqs. (3) and (4), the performance of the emulator was enhanced.

$$I_{01} = I_{02} = I_o = \frac{I_{PVn} + k_i \Delta T}{\exp[(V_{ocn} + k_v \Delta T)/\{a_1 + a_2/P\} V_T] - 1} \tag{3}$$

$$R_P = \frac{V_{mp} + I_{mp} R_s}{\{I_{PV} - I_o\left[\exp\left(\frac{V_{mp} + I_{mp} R_s}{V_T}\right) + \exp\left(\frac{V_{mp} + I_{mp} R_s}{(p-1) V_T}\right) - 2\right] - \frac{P_{\max}}{V_{mp}}} \tag{4}$$

Where,

V_{oc}, I_{sc} indicates open circuit voltage and short circuit current
V_{mp}, I_{mp} denote the maximum voltage and current at maximum power point.
K_v, K_i are the open circuit voltage and short circuit current coefficients.

3.2. Converter based PV emulator

Being an essential tool for MPPT in solar PV system [18–23], the role of DC-DC converters in the implementation of solar PV emulators is very vital. Further DC-DC converters are usually used as an interface between the PV panel and the load to achieve impedance matching [22,23]. In fact, the presence of these converters ensures that the maximum available power is extracted from the PV panel at all operating conditions. Moreover, the PV emulator can be designed with a constant DC source connected to the load through a power electronic interface. Meanwhile, a controller is programmed with all necessary information from the manufacturer's data sheet and with reference to those values; the duty cycle of the converter is altered. This in fact changes the effective resistance seen by the panel with respect to the load to get different operating points in the I-V curve. The structure of a converter based PV emulator is depicted in Fig. 5.

In Fig. 5, based on the duty cycle generated by the buck converter, the operating points in non-linear I-V curve are traced. The load line characteristics of a solar PV emulator employed with DC-DC converter is shown in Fig. 6. In literature, many authors have proposed scholarly researches on PV emulators with the application of different DC-DC converters. Those emulators are analyzed and a discussed in detail in the following sub section.

3.2.1. A survey on converter based PV emulators

The non-linearity associated with solar PVs must be dealt with extreme care under rapidly changing irradiation conditions. This facilitates critical consideration to the system dynamics and transient conditions while designing a real-time emulator. In this regard, a PV emulator was designed using Growing Natural Gas (GNG) in a neural network platform in [25]. But, the output percentage error was significantly high. In a similar approach in [26], the author has designed a Single-Ended Primary Inductor-Converter (SEPIC) based PV emulator with a higher accuracy. Since the mathematical modeling was done, close agreements with the experimental values were observed with emulated values. Similarly, in [27] the authors have designed the emulator using a SEPIC converter and an analysis of the design of emulators based on buck, boost and buck boost converters were also presented.

In [28] the authors have implemented an emulator design using the buck converter as an interface to dspace platform to emulate accurate solar PV characteristics. Furthermore, the dynamic behavior of the laboratory simulator has been tested for a string of panels connected in series-parallel arrangement. The calculation of PV panel current and series resistance was done as shown below.

$$\begin{cases} I_{PV,tot} = I_{PV} * N \\ I_{tot} = N_p I \\ R_{s,tot} = R_s N_s / N_P \end{cases} \tag{5}$$

Where, 'I_{PV}' is the solar PV current, 'N_s, N_p' are the number of cells connected in series and parallel respectively.

In [29], a new emulator topology was proposed by making use of the conventional buck converter along with a PI controller. The designed system has simulated a 55 W PV panel with reasonable accuracy. In [30], the emulator is designed for grid connected inverters and in addition, a look up table approach was also presented to produce exact curve fit with respect to the manufacturer's I-V characteristics. Despite of all these methods, a novel emulator topology independent of varying environmental conditions has been developed and tested in [31]. The design was made more specific for MPPT applications and the successful testing of conventional P & O MPPT algorithm illustrated its accuracy under varying weather conditions. However, the system design was limited to a narrow operating range. A new indoor PV based programmable DC source was developed in [31] where the author has determined the PV current using the look up table approach to determine V_{OC} & V_{MP}, knowledge regarding the PV panel arrangement was utilized. The developed emulator was also tested for MPPT application and a satisfactory performance was achieved under all operating conditions.

In another approach in [34], FPAA (Field Programmable Analog Array) was used for the PV emulator design. The method showed elevated performance in replicating exact I-V and P-V curves. Moreover, the system can be extended for MPPT implementation as well. It is trustworthy to mention that reliable performance was achieved while interfacing, especially to a buck converter. Similarly, an emulator adaptable for smart grid systems was developed and experimentally validated under different irradiation and temperature conditions in [35].

In [36], an advanced LLC resonant converter based emulator design was proposed and the performance evaluation on the voltage and current ripple were analyzed. In addition, comparative studies with the buck converter based emulators are also presented. The comparative study clearly suggested that the improvisations made in resonant converter based PV emulator could provide reliable operation even at higher frequencies. A detailed analysis of different methodologies adopted to realize converter based emulators is presented in Table 2.

3.3. Emulator design using real time controllers

With the application of real time controllers in designing PV emulators, the researches in PV emulators have witnessed the topnotch accuracy in replicating the actual I-V and P-V curves. In particular, the high-end controllers are more likely to accustom real-time simulation of I-V and P-V curves with precision. The advantages associated with

Table 2
Analyses on converter implemented PV emulators: .

Sl. No.	Author/s	Ref	Programmable variables	Converter used and rating	Modeling	Conversion stages	Hardware Description/ design platform	Structural complexity
1	Maurizio Cirrincione	[25]	V_{OC},I_{SC}, G, T	Buck Converter	Single diode Model	DC Source + PV model+ Buck Converter + Load	DSP Controller/ MATLAB	Complex
2	E. Duran	[27]	V_{OC},I_{SC}	SEPIC Converter	Single diode Model	DC Source + PV model+ SEPIC Converter + Load	NS/ MATLAB	High
3	Veerachary	[26]	V_{OC},I_{SC}, G, T, V_{mp}, I_{mp}	SEPIC Converter	Single diode Model	DC Source + PV model+ SEPIC Converter + Load	NS/PSPICE	Very less
4	Maria Carmela Di Piazza	[28]	V_{OC},I_{SC}, G, T	Buck Converter, 3 kW	Single diode Model	DC Source + PV model+ Buck Converter + Load	dspace/ MATLAB	Moderate
5	Hayrettin CAN	[29]	V_{OC},I_{SC}, G, T	Buck Converter, 2.16 kW	Single diode Model	DC Source + PV model+ Buck Converter + Load	NS/ MATLAB	Simple
6	Javier Chavarria	[30]	V_{OC},I_{SC}	Boost Converter, 1.5 kW	Single diode Model	DC Source + PV model+ Boost Converter + Inverter + Grid	NS/ MATLAB	Complex
7	Z. Zhou	[31]	V_{OC},I_{SC}	Boost Converter, 1.5 kW	Single diode Model	DC Source + Boost Converter + Load	Microcontroller/ MATLAB	Simple
8	Francesco Barra	[34]	V_{OC},I_{SC}, P_{mp}, V_{mp}, I_{mp}	Buck Converter, 3 kW	Single diode Model	DC Source + PV model+ Buck Converter + Load	FPAA / MATLAB	Simple
9	Y. Amirthagunaraj	[35]	V_{OC},I_{SC}, G, T	Boost Converter	Single diode Model	DC Source + PV model+ Boost Converter + Inverter + Grid	Microcontroller/ MATLAB	Moderate
10	Mohammad Tauquir Iqbal	[36]	V_{OC},I_{SC}, G, T	LLC resonant Converter, 66 W	Single diode Model	DC Source + PV model+ LLC resonant Converter + Load	NS/ MATLAB	Simple/ Complex
11	Rutu Shah	[37]	V_{OC},I_{SC}, G, T	Buck Converter	Single diode Model	DC Source + PV model+ Buck Converter + Load	NS/ MATLAB	Simple
12	Ahmad Saudi Samosir	[38]	V_{OC},I_{SC}, G, T	Buck Converter	Single diode Model	DC Source + PV model+ Buck Converter + Load	NS/ LabVIEW & MATLAB	Moderate
13	L. P. Sampaio	[39]	V_{OC},I_{SC}	Buck Converter	Single diode Model	DC Source + PV model+ Buck Converter + Load	NS/ MATLAB	Less

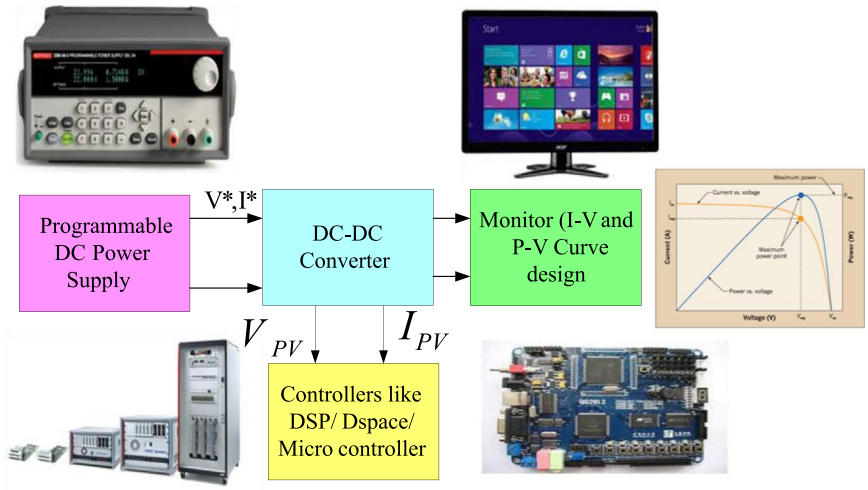

Fig. 7. Controller implemented PV emulator.

these real-time controllers are many fold: (i) ability to simulate accurate P-V and I-V curves under all shading conditions. (ii) Sensitiveness to rapid changes occurring in irradiation conditions (iii) robustness and (iv) flexible in obtaining operating points. The efficient working of PV emulators in a real-time platform is of extreme importance and the step to achieve reliable performance is explained further.

1) Required data from manufacturer's datasheet (V_{OC}, I_{SC}, V_{MP}, I_{MP}) are programmed in to the controller.
2) These data are effectively used to build an interface with converter [42,43].
3) Various duty cycles generated by the controller are sent to the converter to trace the operating points in the non-linear I-V curve.
4) Thus, the emulator emulates the I-V and P-V characteristics at various operating regions.

The schematic representation of a real time controller based PV emulator is shown in Fig. 7.

3.3.1. A survey on real time controller based PV emulators

Being well known for its advantages in real time simulation, a new computer controlled DC power based emulator was proposed in [24]. Though there were no precise results under random climatic conditions, the method has gained considerable attention of the researchers in real time simulation of PV characteristics. The advantages of simulating real time I-V characteristics brought about the introduction of dspace controllers towards solar PV emulator design [40–55]. The authors in [40] have extended their work using dspace for the effective simulation of P-V curves at different irradiation levels, temperature conditions and partial shading conditions. Furthermore, the applications towards grid connected systems were also discussed.

Similarly, [42] has used the same controller to emulate the solar PV characteristics. The article proposed a higher bandwidth operation to achieve quick response and reduced ripples in voltage and current waveforms, such that reliable operation of the PV emulator was ensured. Another advanced approach was proposed in [41], where the dspace controller for GUI (Graphical User Interface) was used for simulating the I-V and P-V characteristics at different temperature and irradiance levels.

In [51], a PV emulator based on a PI (Proportional-Integral) controller was developed with a prime focus towards the load changing environment. The author has achieved improved results for accurate PV emulation. A Shell 115 W PV panel was used for the experimental validation of the system. Furthermore, the design can be extended to grid connected systems as well. In a microcontroller based approach in [45], an emulator design for MATSAT satellite application was developed. But, the results obtained showed high error indicating necessary design improvements. In another approach an interesting two stage DC-DC conversion was employed for emulating the PV characteristics along with an MPPT application. The Buck-Boost converter emulated the PV characteristics whereas the buck converter is ensured to operate at Maximum Power Point Tracking [46].

With these fast growing technologies, a new Sitara Cortex 9 ARM controller based solar PV emulator was designed in [48]. The developed model was validated for its effective performance for three different panels (Multi-crystalline solar MSX-60, Mono-crystalline Shell SP-70, Thin-film Shell ST40). Furthermore, the experimental results showed higher accuracy and quick response. Similar to the ARM controller, a DSP based PV emulator design was developed in [49] and an improved performance was achieved under several partial shading conditions. In [50], a novel Power Hardware-In-the-Loop Simulation (PHILS) in RT-Lab platform was developed for designing a PV emulator. A much faster PV computing was experienced with very high resolution in output waveforms.

Being an efficient tool for solving non-linear optimization problem, the ANN along with an FPGA controller was applied for simulating the PV characteristics in [76]. The system design based on MSE (Mean Square Error) was validated for an improved accuracy as well.

Recently, a new accurate PV model capable of accurate reproduction of I-V and P-V characteristics is proposed in [55]. The method has following advantages (i) provision of real time control (ii) reduced ripple content (iii) easier hardware testing and (iv) less memory requirement. Furthermore, the control of the dynamic behavior and the stability levels of the system are highly appreciable. However, in recent times, various approaches are proposed using different controllers for the design of efficient and reliable PV emulators. A consolidated analysis of each method is presented in Table 3.

3.4. Design of hybrid emulators

Recognizing the importance of integrating several other renewable energy resources like fuel cell, wind turbines etc. to PV power plants for reliable power generation, emulators that can emulate the output characteristics of wind turbines and fuel cells along with the PV characteristics can precisely emulate the entire characteristics of whole power system. Hence with an attention to parallel renewable sources, hybrid emulators were designed and developed. Hybrid emulators are specifically designed for particular applications like smart grids. Several researches regarding hybrid emulators especially with an

Table 3
Analysis of real time controller based in PV Emulator.

Sl. No	Controller used	Author name	Ref	Converter used and rating	Conversion stages	Model	complexity	Design platform
1	dspace	Ahmed. F. Ebrahim	[41]	NS	Programmable DC Source + controller + Load	Single diode model	Moderate	MATLAB
		S Mohammed Azharuddin	[42]	Buck Converter	DC Source + Buck Converter + Load	Single diode model	Less	MATLAB
2	FPGA	Damla Ickilli	[43]	Buck Converter	DC Source + Buck Converter+ FPGA developer + Load	Single diode model	High	MATLAB
3	Microcontroller	Dylan D.C. Lu	[46]	Buck-Boost Converter	DC Source + Buck-Boost Converter + Load	Single diode model	Very high	MATLAB
		Mustapha Elyaqouti	[47]	Buck Converter	DC Source + Buck Converter + Load	Single diode model	Moderate	MATLAB
4	ARM controller	Alejandro Castillo Atoche	[48]	DC-DC Converter	Programmable DC Source + DC-DC Converter schematic + Load	Double diode model	Moderate	MATLAB
5	DSP controller	Cheng-Chuan Chen	[49]	Buck Converter	DC Source + Buck Converter + Load	Single diode model	High	MATLAB
6	RT-Lab Platform	Jee-Hoon Jung	[50]	NS	Programmable DC Source + Electronic Load	Single diode model	High	MATLAB
7	PI Controller	A. Vijayakumari	[51]	Buck Converter	DC Source + Buck Converter + Load	Single diode model	High	MATLAB
		Guillermo Martín-Segura	[52]	Rectifier, 4.4 kW	DC Rectifier + inverter + Load	Single diode model	High	MATLAB

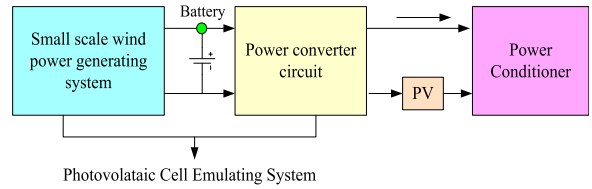

Fig. 8. Wind turbine driven PV emulator [56].

application to grid connected systems are available in literature. Hence a detailed survey on various hybrid emulators has been conducted and is presented in the subsection.

3.4.1. A Survey on hybrid emulators

As mentioned earlier, Hybrid emulators have enhanced the scope of integrating one or more renewable energy resources for efficient power generation. The prediction of I-V and P-V curves for all the sources connected in a system have lightened up the researches regarding grid connected systems and has resulted in an enhanced efficiency of the whole power system. One such attempt is made in [56] where, small scale wind turbines were used to design a power conditioning unit that simulated the I-V and P-V curves. In addition, the authors have also discussed the effect of various panel configurations while predicting the I-V curves. The system schematic is depicted in Fig. 8.

An advanced hybrid emulator integrating three renewable sources are presented in [57]. The hybrid emulator was capable of replicating I-V and P-V characteristics of wind turbines [56], solar panels and fuel cells [63–68]. Furthermore, the system was analyzed under shaded conditions too. Similar approach was carried out in [58] and the integration wind turbine to a PV system was analyzed. However, both methods failed to replicate accurate I-V and P-V curve under partially shaded conditions. Similar approach is also presented in [59] where, a hybrid emulator design comprising of fuel cell, PV and battery was developed in the LABVIEW platform [78]. An attractive note in this article is that it can emulate three sources (batter, Solar, PEMFC) with high response speed. Similarly, the author in [60] has proposed a hybrid emulator for integrating wind and solar PV systems. Although the emulator was highly demanding, the complexity in computation was an addtional burden.

Other than hybridization, the authors in [62] have proposed a new miscellaneous two stage PV emulator consisting of a DC-DC boost converter and an inverter. Furthermore, two control functions are proposed in the operating modes of the system. One mode operates as an MPPT and the other mode is a 'reserved power control mode' to control the active and reactive power flow. This emulator however has succeeded in emulating near accurate I-V and P-V curves ensuring trusted MPPT operation. A detailed analysis on hybrid and miscellaneous PV emulators is illustrated in Table 4.

4. Comparative study

With immense future scope, and numerous research shown the potential of emulator to reproduce the characteristics of PV panels accurately. Different emulators have been developed, ranging from basic diode approximation to the recently evolved IOT based methods. A detailed comparative study with emphasis on the following criteria has been performed: (i) Realization Cost, (ii) Accuracy, (iii) Level of complexity, (iv) Sensitivity to varying environmental conditions, (v) Hardware implementation and (vi) Efficiency. Further the discussions made can be helpful for the PV researchers to further strengthen the dynamic and steady state performance of the PV emulators.

4.1. Realization cost

Implementation cost is one of the crucial parameter to be considered while designing a PV emulator. It is important to note that, the

Table 4
Analysis of hybrid and miscellaneous PV emulators.

Sl. No	Classification	Author/s	Ref	Integrated Sources other than PV	Converter used and rating	Design Platform	Complexity	Limitations	Hardware implementation
1	Source oriented	S. Masashi	[56]	Small scale wind turbine	DC-DC Bi- Directional Converter	MATLAB	moderate	● Pulsating components. ● Output not investigated.	NS
2		Sushil Thale	[59]	Fuel cell	Fly back Converter,5 kW	LabVIEW	high	● High complexity. ● Partial Shading Conditions not discussed.	DSP controller (TMS320F28027)
3		Dhaker Abbes	[60]	Wind turbine	Buck Converter	MATLAB	moderate	● Mathematical modeling is difficult.	dspace DS1104
4	Application oriented	Andrew Xavier Raj. I	[57]	Smart grid (Wind, Fuelcell)	NS	MATLAB	Very high	● Integration of sources is difficult.	DSP Controller (TMS320F28335)
5		Preethishri. T. P. V	[58]	Wind driven induction generator	Analog Converters	MATLAB	less	● Partial Shading Conditions not analyzed.	DSP Controller (TMS320F28335)
6		Wenchao Cao	[62]	NS	Boost Converter	MATLAB	Very high	● Control is difficult, since two converters are involved.	DSP Controller (TMS320F28335)

cost involved discussed here is the cost of supply side emulation and it may differ in the case of grid connected systems. Conventional PV emulator topologies use low cost OP-AMP with diode based approximation design [9–12]. However, its accuracy and fitness of the simulated curve were not encouraging. Hence PV emulators based on converters comprising of a DC source, PV model and a DC-DC power converter have emerged. Even though the cost of implementation was high, the system reproduced PV curves with precision. As an extension to the converter based PV emulators, real time controllers like dSPACE [41,42], ARM controller [48] and DSP controller [49] were also introduced. These controllers necessitated additional cost for accurate results. While in case of hybrid emulators, the cost of implementation is slightly high; since all the sources have to be considered for the system design [59,60].

4.2. Accuracy

The function of a PV emulator is to imitate the actual I-V and P-V curves of a PV panel with minimal error. Here, error refers to the deviation of emulated curve with respect to manufacturer datasheet. Among the methods, the single diode model based approximation showed poor accuracy with high irregularity in I-V and P-V curves. [10,12]. On the other hand, double diode model based approximation techniques [14,17] brought a better curve fit owing to the numerical methods adopted.

In recent years, the introduction of converter based PV emulators significantly reduced the error levels of PV emulators [24–39]. Various converters like buck [25,28], boost [35], SEPIC [26,27], push pull and LLC resonant converters [36] were found to be adaptable. To highlight the remarkable performance of converter based emulators a comparison table showing key observations is presented in Table 5. Further in advanced versions, the modern controllers like dSPACE, DSP, RT-Lab etc. have been imparted to produce good accuracy owing to the wide design scope [42,43,48,49]. However, in the case of hybrid PV emulators, less appealing I-V and P-V curves were obtained; since the nature of the curve is always dependent on the power generation of other sources as well.

4.3. Level of complexity

The level of complexity involved in PV emulator is a notable factor and is evaluated based on the following criteria: (i) Control structure, (ii) Circuit complexity, (iii) Controller design, and (iv) Number of power conversion stages. In case of single diode approximation technique, the complexity involved is quite low; since simple control structure was adopted [11,12]. But in case of double diode approximation model, the complexity slightly increased due to the increased number of parameters involved [14]. Similarly, the controller implemented for a real time PV emulator has to be coded in a different platform hence complexity to the design of the system. In particular, DSP controller and FPGA controller needs a separate platform to code their processors [41,43]. In spite of their complexity, the emulator designed on these platforms has higher accuracy. Further in a RT-LAB based platform, the complexity is quite high because of its coding structure and the dependency on an unused programming platform [50]. Moreover in hybrid PV emulators, complexity is high because the modeling must be done for other sources like wind turbine and fuel cells [59,60].

4.4. Sensitivity to varying environmental conditions

The choice of PV emulators varies based on their ability to emulate PV characteristics under all operating conditions especially under partial shading conditions. The colossal dependency of a PV panel to the climatic changes in fact challenged the Op-Amp based single diode approximation techniques to a great extent under partial shading

Table 5
Analysis of converters used in PV emulators: .

Sl. No	Converter classification	Output equation	Key observations
1	Buck converter	$V_o = DV_g$	• Output ripple is less. • It is a non-isolated converter.
2	Boost converter	$V_o = \frac{V_g}{1-D}$	• Output ripple is high. • It is used in applications where inversion operation is required.
3	Buck boost converter	$V_o = \frac{DV_g}{1-D}$	• The properties of both buck and boost are present in the converter. • Output ripple is less.
4	SEPIC converter	$V_o = \frac{DV_g}{1-D}$	• It is an isolated converter. • It reduces the transients and improves steady state response of the system.

Table 6
Comparative analysis of different methods in emulator implementation:.

S.no	Method	Ref	Curve fitting accuracy	Cost	Complexity	Performance under PSC	Hardware implementation	Efficiency
1	Single Diode Approximation method	[9,10]	Less	Less	Less	Less	Easy	Less
2	Double Diode Approximation method	[14]	High	Moderate	Moderate	High	Moderate	Moderate
3	Converter based	[24–39]	Moderate	Moderate	Moderate	Moderate	Moderate	High
4	Controller based	[40–55]	High	High	High	High	Moderate	High
5	Miscellaneous	[56–62]	Moderate	High	High	Less	Difficult	Less
6	Voltage Regulation based	[77]	Moderate	Less	Less	Less	Easy	Less
7	Lambert omega method	[79,80]	Less	Less	Moderate	Less	Not realizable	Less
8	Battery based	[70]	High	High	Moderate	Less	Moderate	Less
9	IOT based	[75]	High	High	High	Less	Moderate	Less
10	CPS (constant Power Source) based	[71]	Moderate	Moderate	Moderate	Less	Moderate	Modearte

conditions. But, the problem was effectively handled by the double diode model based approximation techniques [9,14]. Similarly, the converter based PV emulators also had the advantage of tracing exact P-V and I-V curve under all irradiation conditions. To be definite, the newly evolved controller based PV emulators handled the challenge very well to obtain accurate solar PV characteristics [46–50]. As explained in the previous sections, in the case of hybrid emulators, the PV performance in all irradiations cannot be accurately replicated as it relies on other integrated sources too [59,60].

4.5. Hardware implementation

Starting from the conventional diode approximation based PV emulators to the recently developed FPGA and FPAA controllers the challenges present in hardware implementation are quite higher [43,79]. Methods like single and double diode approximation techniques use only simple Op-Amps and varying potentiometers for hardware realization. Similarly, in [42] dspace based real time emulator was utilized. A DSP processor based PV emulator design is incorporated [49] and an extension of this work with a smart grid interface through an inverter application is presented in [57]. In another approach in [50], RT-lab based platform was used and PV characteristics for mono crystalline and polycrystalline PV panels were emulated. Adding innovation, simple microcontrollers were also used to design PV emulators in [46,47].

4.6. Efficiency

Efficiency of PV emulator is one of the crucial parameter that decides its selection. Further it is important to note that based on (i) I-V curve reproduction, (ii) Fill factor and (iii) curve-fit accuracy, the efficiency of the method is determined. Single diode approximation methods are less efficient to reproduce accurate I-V curve but the modified double diode approximation method has the ability to reproduce the curves even under low irradiation conditions. However the method lacks accuracy under varying atmospheric conditions. Having the provision to extend for MPP operation, converter based PV emulator in real time is more efficient to emulate the PV characteristics. Particularly, usage of controllers like dspace, DSP and ARM processor provide high efficiency even under change in irradiation conditions.

To summarize the efforts of the comparative study, a comparison table considering the above factors is arrived and presented in Table 6. The performance of each method is gauged qualitatively in terms of Less, Moderate and High values. However, the hardware complexity is weighed in terms of easy, not realizable and difficult.

5. Conclusion

In this paper, various methods adopted to realize solar PV emulators are reviewed. A detailed study was carried out by analyzing different methodologies on emulators and their ability to reproduce accurate I-V characteristics under partial shading conditions. A comparative study of all methodologies based on the realization cost, accuracy, level of complexity, performance under varying environmental conditions, and hardware implementation was also presented. Further, some concrete inferences on each methodology were also presented on the basis of the comparative study carried out. Besides, the advantages and limitations of all these methods are vividly stated in this paper. Based on the analysis done on the various researches available in literature, the following points can be summarized.

- ➢ Even though the single diode model can replicate the PV characteristics at standard test conditions, for emulator designs based on numerical approach, the double diode model must be preferred above single diode model as double diode model can efficiently adapt to varying environmental conditions.
- ➢ Using modified output equations of PV models based on the change in irradiation and temperature levels, can significantly increase the accuracy of the emulators particularly at changing irradiation and temperature levels.
- ➢ Converter based emulator design must be preferred for sensitive

applications like maximum power point tracking owing to its simplicity. However, for all converters based emulator designs proposed in the literature, single diode modeling was mostly adopted.

- ➢ To further enhance the reliability and efficiency, for converter based emulator designs, new high-end converter topologies possessing reduced harmonics and ripple free output may also be used as they are expected to impart enhanced stability to the system.
- ➢ Grid connected systems require efficient and reliable testing before its installation since proper co-ordination is to be ensured between the two energy sources. Hence, for grid connected systems, real-time controllers based emulators must be used even though, the realization cost is high.
- ➢ Even if a number of hybrid emulators are discussed in the literature, none of them are substantially capable of emulating the characteristics of different sources. However, the efforts that have been made so far in this regard require at most appreciation. Furthermore, it should be noted that hybrid emulators are still in the developmental phase having remarkable research space to carry out further researches.

Acknowledgements

The authors would like to thank the Management, VIT University, Vellore, India for providing the support to carry out research work. This work is carried out at Solar Energy Research Cell (SERC), School of Electrical Engineering, VIT University, Vellore. Further, the authors also would like to thank the reviewers for their valuable comments and recommendations to improve the quality of the paper.

References

[1] Chetan Singh Solanki. Solar photovoltaics - fundamentals, technologies and applications hard cover. Third ed. 14th Apr; 2015.
[2] Villalva MG, Gazoli JR. Comprehensive approach to modelling and simulation of photovoltaic arrays. IEEE Trans Power Electron 2009;24(5):1198–208.
[3] Babu TS, Ram JP, Sangeetha K, Laudani A, Rajasekar N. Parameter extraction of two diode solar PV model using fireworks algorithm. Sol Energy 2016;140:265–76.
[4] Nishioka K, Nobuhiro S, Yukiharu U. Analysis of multi-crystalline silicon solar cells by modified 3-diode equivalent circuit model taking leakage current through periphery into consideration. Sol Energy Mater Sol Cells 2007;91:1222–7.
[5] Rajasekar N, Kumar Neeraja Krishna, Venugopalan Rini. Bacterial Foraging Algorithm based solar PV parameter estimation. Sol Energy 2013;97:255–65.
[6] Askarzadeh Alireza, Rezazadeh Alireza. Extraction of maximum power point in solar cells using bird mating optimizer-based parameters identification approach. Sol Energy 2013;90:123–33.
[7] Ram JP, Babu TS, Dragičević T, Rajasekar N. A new hybrid bee pollinator flower pollination algorithm for solar PV parameter estimation. Energy Convers Manag 2017;135:463–76.
[8] Ram JP, Babu TS, Rajasekar N. A comprehensive review on solar PV maximum power point tracking techniques. Renew Sustain Energy Rev 2017 31;67:826–47.
[9] Marenholtz Pete E. Programmable solar array simulator. IEEE Trans Aerosp Electron Syst 1966;6:104–7.
[10] Nagayoshi O. Novel PV array/module IV curve simulator circuit. In: Proceedings of the photovoltaic specialists conference; 2002. p. 1535–8.
[11] Nagayoshi H. Characterization of the module/array simulator using I-V magnifier circuit of a p-n photo-sensor. In: Proceedings of the 3rd world conference on photovoltaic energy conversion; 2003. p. 2023–6.
[12] Midtgard OM. A simple photovoltaic simulator for testing of power electronics. In: Proceedings of the European conference on power electronics and applications. Aalborg; 2007, pp. 1–10.
[13] Schofield DMK, Foster MP, Stone DA. Low-cost solar emulator for evaluation of maximum power point tracking methods. Electron Lett 2011;47:3.
[14] Ishaque Kashif, Salam Zainal, Syafaruddin . A comprehensive MATLAB Simulink PV system simulator with partial shading capability based on two-diode model. Sol Energy 2011;85:2217–27.
[15] Sanaullah Ahmed, Abbas Khan Hassan. Design and implementation of a low cost solar panel emulator. In: Proceedings of the 42nd IEEE photovoltaic specialist conference. PVSC; 2015.
[16] kui Wang, Yongdong Li, Jianye Rao, Min Sun. Design and implementation of a solar array simulator. In: Proceedings of the international conference on electrical machines and systems. ICEMS; 2008. p. 2633–6.
[17] Can Hayrettin, Ickilli Damla, Parlak KoraySener. A new numerical solution approach for the real-time modeling of photovoltaic panels. In: Proceedings of the Asia-Pacific power and energy engineering conference; 2012.
[18] Deshkar Subhankar Niranjan, Dhale Sumedh Bhaskar, Mukherjee Jishnu Shekar, Sudhakar Babu T, Rajasekar N. Solar PV array reconfiguration under partial shading conditions maximum power extraction using genetic algorithm. Renew Sustain Energy Rev 2015;43:102–10.
[19] Sudhakar Babu T, Rajasekar N, Sangeetha K. Modified particle swarm optimization technique based maximum power point tracking for uniform and under partial shading condition. Appl Soft Comput 2015;34:613–24.
[20] Sundareswaran Kinattingal, Peddapati Sankar, Palani Sankaran. MPPT of PV systems under partial shaded conditions through a colony of flashing fireflies. IEEE Trans Energy Convers 2014;29(2):463–72.
[21] Sundareswaran Kinattingal, Peddapati Sankar, Palani Sankaran. Application of random search method for maximum power point tracking in partially shaded photovoltaic systems. IET Renew Power Gener 2014;8(6):670–8.
[22] Ram JP, Rajasekar N. A novel flower pollination based global maximum power point method for solar maximum power point tracking. IEEE Trans Power Electron 2016.
[23] Ram JP, Rajasekar N, Miyatake M. Design and overview of maximum power point tracking techniques in wind and solar photovoltaic systems: a review. Renew Sustain Energy Rev 2017;73:1138–59.
[24] Hoffman K. Real-time simulation of photovoltaic modules. Sol Energy 1996;56(6).
[25] Cirrincione Maurizio, Piazza MariaCarmelaDi, Pucci Marcello. Gianpaolo, real-time simulation of photovoltaic arrays by growing neural gas controlled DC-DC converter. In: Proceedings of the IEEE power electronics specialists conference; 2008.
[26] Veerachary M. PSIM circuit-oriented simulator model for the nonlinear photovoltaic sources. IEEE Trans Aerosp Electron Syst 2006;42(2):735–40.
[27] Duran1 E, Galan J, Sidrach-de-Cardona M, Segura M. An application of interleaved DC-DC converters to obtain I-V characteristic curves of photovoltaic modules. In: Proceedings of the 34th annual conference of IEE industrial electronics; 2284–89; 2008.
[28] Piazza Maria Carmela Di, Vitale Gianpaolo. Photovoltaic field emulation including dynamic and partial shadow conditions. Appl Energy 2010;87:814–23.
[29] Hayrettin CAN. Model of a photovoltaic panel emulator in MATLAB- Simulink. Turk J Electr Eng Comput Sci 2013;21:301–8.
[30] Chavarria Javier, Biel Domingo, Guinjoan Francese, Poveda Alberto, Masana Francese, Alarcon Eduard. Low cost photovoltaic array emulator design for the test of PV grid-connected Inverters. IEEE 2014:1–6.
[31] Zhou Z, Holland PM, Igic P. MPPT algorithm test on a photovoltaic emulating system constructed by a DC power supply and an indoor solar panel. Energy Convers Manag 2014;85:460–9.
[32] Durago Joseph. Thesis on photovoltaic emulator adaptable to irradiance, temperature and panel-Specific I-V curves; 2011.
[33] Pelin Denis, Antolovic Jelena Jukic, Rapcan Vjekoslav. PV emulator. Int J Electr Comput Eng Syst 2014;5:21–6.
[34] Barra Francesco, Balato Marco, Costanzo Luigi, Gallo Daniele, Landi Carmine, Luiso Mario, Vitelli Massimo. Dynamic and reconfigurable photovoltaic emulator based on FPAA. In: Proceedings of the 20th international symposium and modelling and testing research on electric and electronic measurement for the economic upturn; 2014. p. 1005–10.
[35] Amirthagunaraj Y, Fazil FM, Sawsan MMA, Binduhewa PJ, Ekanayake JB, Liyanage KM, Atputharajah A, Samarakoon K. Photovoltaic emulator for smart grid test facility. In: Proceedings of the Peradeniya Univ. International Research Sessions. Sri Lanka; 2014, 18: p. 156.
[36] Iqbal Mohammad Tauquir, Tariq Mohd. Analytical study of different DC-DC converter topologies for photo voltaic emulator. J Autom Syst Eng 2014:245–54.
[37] Shah Rutu, Rana Ankur. Voltage controlled buck converter based photovoltaic emulator. In: Proceedings of the international conference on electrical, electronics, signals, communication and optimization. EESCO; 2015. p. 1– 4.
[38] Samosir Ahmad Saudi. Modeling and evaluation of solar photovoltaic emulator based on Simulink model. ARPN J Eng Appl Sci 2015:10.
[39] Sampaio LP, Silva SAORobust control applied to a photovoltaic array emulator using buck converter. In: Proceedings of the international conference on renewable energies and power quality; 2015.
[40] Kadri Riad, Andrei Horia, Gaubert Jean-Paul, Ivanovici Traian, Champenois Gérard, Andrei Paul. Modeling of the photovoltaic cell circuit parameters for optimum connection model and real-time emulator with partial shadow conditions. Energy 2012;42:57–67.
[41] Ahmed. F Ebrahima, Ahmed SMW, Elmasry S.E, Osama A Mohammeda. Implementation of a PV emulator using programmable DC power supply. In: Proceedings of the IEEE Southeast Con; 2015.
[42] Mohammed Azharuddin S, Vysakh M, Vilas Thakur Harshal, Nishant B, Sudhakar Babu T, Muralidhar K, Paul Don, Jacob Basil, Balasubramanian Karthik, Rajasekar N. A near accurate solar PV emulator using dspace controller for real-time control. Energy Procedia 2014;61:2640–8.
[43] Ickilli Damla, Can Hayrettin, Parlak KorayS. Development of a FPGA-based photovoltaic panel emulator based on a DC/DC converterth. In: Proceedings of the 38th IEEE photovoltaic specialists conference. PVSC: 001417-001421; 2012.
[44] Tornez-Xavier GM, Gomez-Castaneda F, Moreno-Cadenas JA, Flores-Nava LM. FGPA development and implementation of a solar panel emulator. In: Proceedings of the 10th international conference on electrical engineering, computing science and automatic control. CCE; 2013. p. 467–72.
[45] Czifra Dávid, Marosy Gábor, Glisics Sándor. Solar array emulator and MPPT tester for the masat-1 mission. In: Proceedings of the 13th Biennial Baltic electronics conference. BEC2012. Tallinn, Estonia; 3–5 October 2012. p. 123–6.
[46] Lu Dylan DC, Nguyen Quang Ngoc. A photovoltaic panel emulator using a buck-boost DC/DC converter and a low cost micro-controller. Sol Energy 2012;86:1477–84.

[47] Elyaqouti Mustapha, Alaoui Rachid, Ihlal Ahmed, Bouhouch Lahoussine. Design and realization of an emulator of photo voltaic ye generator. In: Proceedings of the international renewable and sustainable energy conference. IRSEC; 2013. p. 54–57.
[48] Atoche Alejandro Castillo, Castillo Javier Vazquez, Ortegon-Aguilar Jaime, Carrasco-Alvarez Roberto, G10 Jesu sSandoval, Colli-Menchi Adrian. A high-accuracy photovoltaic emulator system using arm processors. Sol Energy 2015;120:389–98.
[49] Chen Cheng-Chuan, Chang Hong-Chan, Kuo Cheng-Chien, Lin Chien-Chin. Programmable energy source emulator for photovoltaic panels considering partial shadow effect. Energy 2013;54:174–83.
[50] Jee-Hoon Jung. Power hardware-in-the-loop simulation (PHILS) of photovoltaic power generation using real-time simulation techniques and power interfaces. J Power Sources 2015;285:137–45.
[51] Vijayakumari AT, Devarajan N Devarajan. Design and development of a model-based hardware simulator for photovoltaic array. Electr Power Energy Syst 2012;43:40–6.
[52] Martín-Segura Guillermo, López-Mestre Joaquim, Teixidó-Casas Miquel, Sudrià-Andreu Antoni. Development of a photovoltaic array emulator system based on a full-bridge structure. In: Proceedings of the 9th international conference electrical power quality and utilisation Barcelona; 2007.
[53] Hoffman K. Real-time simulation of photovoltaic modules. Sol Energy 1996;56(6):521–6.
[54] dspace, ds1104, Hardware installation and configuration and control desk experiment guide, Paderborn, Germany; 2008.
[55] Azharuddin Mohammed, Sudhakar Babu Thanikanti. Nishant Bilakanti & Natarajan Rajasekar electric power components and systems. Electr Power Compon Syst 2016:1–9.
[56] Masashi S, Naoki Y, Muneaki I. Development of photovoltaic cell emulator using the small scale wind turbine. In: Proceedings of the 15th international conference on electrical machines and systems. ICEMS; 2012. p. 1–4.
[57] Andrew Xavier Raj I Anand M Sivakumar P. Modelling and analysis of emulator for distributed generation sourced smart grid using digital signal controller (TMS320F28335). In: Proceedings of the IEEE PES innovative smart grid technologies. India; 2011.
[58] Preethishri TPV, Sathish Kumar K, Sivakumar P. Embedded emulator of photovoltaic array and wind driven induction generator by using digital signal controller (TMS320F28335). In: Proceedings of the international conference on power electronics. IICPE2010; 2010.
[59] Thale Sushil, Wandhare Rupesh, Agarwal Vivek. A novel low cost portable integrated solar PV, fuel cell and battery emulator with fast tracking algorithm. In: Proceedings of the 40th IEEE photovoltaic specialist conference. PVSC; 2014, p. 3138–43.
[60] Abbes Dhaker, Martinez André, Champenois Gérard, Robyns Benoit. Real time supervision for a hybrid renewable power system emulator. Simul Model Pract Theory 2014;42:53–72.
[61] Islam RummanR, Liao Mingyu, Vo ThaiHau, Ravishankar Jayashri. Experimental setup of microgrid with wind and solar power emulators. In: Proceedings of the 2nd IEEE international conference on electrical energy systems. ICEES; 2014. p. 9–14.
[62] Cao Wenchao, Ma Yiwei, Wang Jingxin, Yang Liu, Wang Jing, Wang Fred, Tolbert LeonM. Two-stage PV inverter system emulator in converter based power grid emulation system. In: Proceesdings of the IEEE energy conversion congress and exposition; 2013. p. 4518–25.
[63] Restrepo C, Ramos-Paja CA, Giral R, Calvente J, Romero A. Fuel cell emulator for oxygen excess ratio estimation on power electronics applications computers and electrical engineering. Comput. Electr. Eng 2012;38:926–37.
[64] Gebregergis Abraham, Pillay Pragasen. Implementation of fuel cell emulation on DSP and dspace controllers in the design of power electronic converters. IEEE Trans Ind Appl 2010;46(1):285–94.
[65] Atia Yousry, Zahran Mohamed BA, Al-Hossain Abdullah. solar cell emulator and solar cell characteristics measurements In dark and Illuminated conditions. Artic Wseas Trans Syst Control 2011;6:125–35.
[66] Balasubramanian Karthik, Jacob Basil, Priya K, Sangeetha K, Rajasekar N, Sudhakar Babu T. Critical evaluation of genetic algorithm based fuel cell parameter extraction. Energy Procedia 2015;75:1975–82.
[67] Rajasekar N, Jacob Basil, Balasubramanian Karthik, Priya K, Sangeetha K, Sudhakar Babu T. Comparative study of PEM fuel cell parameter extraction using genetic algorithm. Ain Shams Eng J 2015;6:1187–94.
[68] Marsala G, Pucci M. A prototype of a fuel cell PEM emulator based on a buck converter. Appl Energy 2009;86(2):192–2203.
[69] Ziming Zhuo, Jianwen Zhang, Haimeng Sun, Gang Wang, Xiwen Hu, Shi Zhao. Research on photovoltaic array emulator system based on a novel zero-voltage zero-current switching converter. In: Proceedings of the Asia-Pacific power and energy engineering conference; 2010. p. 1-4.
[70] Chou Pai H , Park Chulsung, Park Jae, Pham Kien, Liu Jinfeng . B: a battery emulator and power profiling instrument. ZSLPED; 2003. p. 288–93.
[71] Mukerjee D. DC power supply used as photovoltaic simulator for testing MPPT algorithms. Renew Energy 2007;32(4):587–92.
[72] Komerath M, Komerath P. Terrestrial micro renewable energy applications of space technology. Phys Proc 2011;20:255–69.
[73] Qinglong M, Yuan W. Irradiance characteristics and optimization design of a large-scale solar simulator. Sol Energy 2011;85(9):1758–67.
[74] Calo Pietro, Fiscelli Giuseppe, Bue Francesco Lo, Stefano Antonio Di, Giaconia Costantino. An electronic emulator of combined photovoltaic and solar thermal systems. Ecol Veh Renew Energy 2010.
[75] Golubovic Edin, Ustundag BarisCan. Internet of things inspired photovoltaic emulator design for smart grid applications.
[76] Gómez-Castañeda F, Tornez-Xavier GM, Flores-Nava LM, Arellano-Cárdena1 O, Moreno-Cadenas JA. Photovoltaic panel emulator in FPGA technology using ANFIS approach. In:Proceedings of the Proceedings of 11th international conference on electrical engineering, computing science and automatic control; 2014.
[77] Agrawal Jaya, Aware Mohan. Photovoltaic system emulator. In: Proceedings of the IEEE international conference on power electronics, drives and energy system; 16–19 December 2012.
[78] Dolan DaleSL, Durago Joseph, Taufik. Development of a photovoltaic panel emulator using labview. In: Proceedings of the 37th IEEE photovoltaic specialists conference. PVSC: 001795-001800; 2011.
[79] Jiang Tianxiang, Putrus Ghanim, McDonald Steve, Conti Matteo, Li Bowen, Johnston David. Generic photovoltaic system emulator based on Lambert ω function. In: Proceedings of the 46th international universities power engineering conference 5–8th; 2011.
[80] Binduhewa PrabathJ, Barnes Mike. Photovoltaic emulator. In: Proceedings of the 8th IEEE international conference on industrial and information systems. ICIIS. Sri Lanka; 18–20 August. p. 519–24.